LPG Training

Our expertise at your fingertips

BOOK 1

Changeover Natural Gas to LPG

IAN OULTRAM

WELCOME

Thank you for downloading this free sample handbook from our LPG Safety Series. It will give you a flavour of the detailed content we provide in our manuals.

We publish seven titles in the series so hopefully we have one that will suit your needs. We have worked hard to produce a reference resource that you will find useful on a day to day basis.

Printed in a handy A5 size, all manuals are produced from high quality white paper in full colour and feature a fold flat binding for easy use.

Our handbooks are available to purchase from Amazon and Ebay or directly from us.

Quantity discounts apply for training providers and colleges.

Ian Oultram
Managing Director
LPG Training

Website: www.lpgtraining.co.uk

Email: mail@lpgtraining.co.uk

Telephone: +44 (0)1244 539 997

© LPG Training & Assessment Ltd 2017

LPG SAFETY SERIES

Book 1 Changeover Natural Gas to LPG

This handbook is aimed at natural gas operatives wanting to convert their qualifications from natural gas to LPG. Typically undertaking CONGLP1.

Available now, produced in full colour, containing 240 pages chapters include:

* A Brief History of LPG * Dwelling types Properties & characteristics * Combustion * Storage * Gas supply controls & equipment * Gas pipework - internal * Tightness testing * Purging * Residential Park Homes (RPH) * Leisure Accommodation Vehicles (LAV) * Boats & small craft (B)

Book 2 Bulk Storage and External Pipework

This handbook has been written for the professional LPG engineer. Installing bulk storage vessels and pipework. Typically undertaking CCLP1 EP, VESLP1 and VESLP2.

Available now, produced in full colour, containing 200 pages chapters include:

* A Brief History of LPG * Dwelling types * Properties & characteristics * Combustion * Storage * Gas supply controls & equipment * Gas pipework - internal, external & service * Tightness testing * Purging

Book 3 Residential Park Homes and Leisure Accommodation Vehicles

Gas operatives working on residential and holiday parks are catered for with this core handbook. Designed for candidates undertaking CCLP1 RPH LAV.

Available now, produced in full colour, containing 282 pages chapters include:

* A Brief History of LPG * Dwelling types * Properties & characteristics * Combustion * Storage * Gas supply controls & equipment * Gas pipework * Tightness testing * Purging * Ventilation * Flues * Safety devices & controls * Unsafe situations

© LPG Training & Assessment Ltd 2017

Book 4 Boats and Inland Waterways Craft

This volume caters for gas operatives working on boats and small inland waterway craft. Relevant ACS codes CCLP1 B.

Available February 2018, produced in full colour, containing 220 pages, chapters include:

* A Brief History of LPG * Dwelling types * Properties & characteristics * Combustion * Storage * Gas supply controls & equipment * Gas pipework * Tightness testing * Purging * Ventilation * Flues * Safety devices & controls * Unsafe situations

Book 5 Touring Caravans and Motorhomes

Designed for gas operatives working on touring caravans and motorhomes but without the need to be registered with Gas Safe, typically undertaking our STGW 100 gas qualification.

Available now, produced in full colour, 200 pages, chapters include:

* A Brief History of LPG * Dwelling types * Properties & characteristics * Combustion * Storage * Gas supply controls & equipment * Gas pipework * Tightness testing * Purging * Ventilation * Flues * Safety devices & controls * Unsafe situations

Book 6 An Introduction to LPG (Technical)

A reference handbook for those working with LPG in a factory plant maintenance environment or managers requiring an understanding of LPG and associated risks.

Available now, produced in full colour, 150 pages, chapters include:

* A Brief History of LPG * Properties & characteristics * Combustion * Storage * Gas supply controls & equipment * Gas pipework * Unsafe situations

© LPG Training & Assessment Ltd 2017

LPG SAFETY SERIES

Book 7 An Introduction to LPG (Non-technical)

A reference handbook for those working with LPG on an occasional basis or managers requiring an understanding of LPG and associated hazards.

Available now, produced in full colour, 40 pages, chapters include:

* A Brief History of LPG * Properties & characteristics * Combustion * Storage * Gas supply controls & equipment * Gas pipework * Unsafe situations

© LPG Training & Assessment Ltd 2017

LPG Training
Our expertise at your fingertips

LPG SAFETY

by Ian Oultram

BOOK 1 *Changeover natural gas to LPG*

Issue 4.3 © LPG Training & Assessment Ltd 2017

Published by:

LPG Training & Assessment Ltd

Deva Industrial Estate
Factory Road, Sandycroft
Flintshire. CH5 2QJ
United Kingdom

Tel: +44 (0)1244 539 997

ISBN 978 0 9935421 0 7

Book 1
Issue 4.3 August 2017

Notice

© 2017 The entire content of this publication is protected by copyright, full details of which are available from the publishers. All rights are reserved. No part of this publication may be reproduced, stored in a retrieval system or transmitted in any form or by any means – electronic, mechanical, photocopying, recording or otherwise – without prior permission in writing of the copyright owner. Permissions may be sought directly from Publisher.

The right of Ian Oultram to be identified as the author of this work has been asserted by him in accordance with the Copyright, Designs and Patents act 1988. The author has used best efforts to prepare this handbook but makes no warranty about the contents and will not be liable under any circumstances for any direct or indirect damages resulting from the use of this handbook. Furthermore no responsibility is assumed for any injury and/or damage to persons or property as a matter of products liability, negligence or otherwise, or from any use or operation of any methods, products, instructions or ideas contained in the material herein.

www.lpgtraining.co.uk

Contents

i Welcome
ii A Brief History of LPG
iii Dwelling types

1. LPG Fundamentals
2. Not Used
3. LPG Storage
4. Gas Supply Controls
5. LPG Pipework
6. Tightness Testing
7. Purging
8. Ventilation
9. Flues
10. Not Used
11. Not Used
12. Appendices

Welcome

This LPG Safety handbook is the result of many years development. We have worked hard to provide a resource that will be useful, both in the classroom and in your day to day work as a gas operative. In a handy size to keep with you for quick reference.

This handbook is the subject of continual improvement, your suggestions and comments are welcome.

Ian Oultram
Managing Director
LPG Training & Assessment Ltd

You are encouraged to highlight sections of text and make your own notes in this handbook.	
This handbook belongs to:	

© LPG Training & Assessment Ltd 2017

The author would like to thank the following organisations and companies for their assistance in the preparation of this LPG handbook.

© LPG Training & Assessment Ltd 2017

A brief history of LPG

A short introduction to the history of LPG.

© LPG Training & Assessment Ltd 2017

© LPG Training & Assessment Ltd 2017

A brief history of LPG

The LPG industry is a relative newcomer to the world of energy, only making its commercial appearance early in the 20th century. Even so, man was aware of flammable gases thousands of years ago.

They were first recorded by the ancient Egyptians as far back as 2000 B.C. They took it is a sign from the gods, because it appeared as a mysterious fire escaping from cracks in the ground.

Bottled gas in its modern form was brought to life in 1903 by a German engineer and chemist named Dr Herman Blau. He created a bottled gas which at the time was primarily used for lighting. He called it *Blaugas*, it was expensive to produce and marketed to the wealthy throughout Europe and the USA.

© LPG Training & Assessment Ltd 2017

In 1928 Blaugas was used to power the engines of Graf Zeppelin airships.

During the early 20th century Dr Walter Snelling was working on the problems of refining and storage of petrol. At this time petrol would quickly evaporate whilst in storage. Through his experiments, he discovered that the gases which evaporated could be condensed and stored as a liquid under moderate pressure.

Dr Walter Snelling was to become known as the *Father of LPG*.

He later isolated and identified the two major components of LPG namely *propane* and *butane*. Soon after this he developed a practical method of removing them from petrol.

In 1911 he patented *Liquified Petroleum Gas*, then in 1913 he sold the patent to Frank Phillips founder of the Phillips Petroleum Company for $50,000 (about $1.25m today).

Today, ConocoPhillips is one of the world's largest oil exploration and production companies.

© LPG Training & Assessment Ltd 2017

The early 1900's saw the creation of LPG fuelled cookers and vehicles.

Modern LPG cookers are highly regarded by professional and home cooks alike.

Modern high-performance LPG powered cars are now competing with petrol fuelled rivals at international level

© LPG Training & Assessment Ltd 2017

© LPG Training & Assessment Ltd 2017

1. LPG Fundamentals

Overview	3
Origins	3
Appearance	6
Specific Gravity (SG)	6
LPG pressures	7
Calorific Value (CV)	8
LPG Liquid	9
LPG Vapour	9
Flammability	12
Viscosity	13
Effects of LPG	13
Safety Advice	17
Leaks, fires and explosions	18
BLEVE	20
Fire extinguishers	21
Carriage of LPG cylinders by road	22
Typical properties of LPG	24

This page intentionally blank

Overview

LPG is the abbreviated form of Liquefied Petroleum Gas. It is a hydrocarbon gas, made up of carbon and hydrogen.

LPG is described as a 3rd family gas, there are several gas families.

Table 1.1	
Gas families	
1st	Manufactured (town gas)
2nd	Methane (natural gas)
3rd	LPG (propane & butane)

The most common types of LPG in use today are *commercial propane* and *commercial butane*.

Origins

LPG is a fossil fuel, so called because it was formed millions of years ago from the remains of tiny sea animals and plants. When the plants and animals died, they sank to the bottom of the oceans where they were buried by layers of silt and sand. Over many years, the layers became thousands of feet thick. They were subjected to enormous heat and pressure, changing the energy-rich remains into petroleum and natural gas deposits. Eventually, pockets of these fossil fuels became trapped in rocks much as a wet sponge holds water.

Propane and butane along with methane (natural gas), oil and various solid fuels are all fossil fuels.

Today, LPG is obtained from two large energy industries, namely oil refining and raw natural gas production.

 © LPG Training & Assessment Ltd 2017

The processing of raw natural gas provides approximately 60% of all LPG produced globally.

When raw natural gas is drawn from the earth, it is a mixture of several gases and liquids.

Table 1.2		
Raw natural gas		
90% Methane	5% Propane	5% Other

Methane accounts for about 90% of this mixture, this is then distributed as natural gas. Approximately 5% is propane, the remaining 5% consists of varying amounts of other hydrocarbons such as butane, isobutane, pentane and ethane.

In crude oil refining LPG is produced by a process known as *fractional distillation*, this method also produces heavier fuels such as diesel, jet fuel, fuel oil, and petrol.

About 3% of a typical barrel of crude oil is refined into LPG.

This method of LPG production accounts for about 40% of LPG production worldwide.

LPG produced from these sources is assured since the primary motive for oil companies and natural gas processors is to source crude oil and methane.

A truly versatile fuel

Although tied to the production of natural gas and crude oil, LPG has its own distinct advantages and can perform practically every function of the other fuels from which it is created. It is a most versatile fuel.

Across the world, LPG has found an incredible number of applications, far beyond heating and cooking in a domestic situation. Many of these uses simply cannot be undertaken with any other fuel.

Air conditioning
All terrain vehicles
Asphalt/bitumen heating
Autogas
Barbecues
Bird scaring
Blown air heating
Boiler systems
Boiling rings
Catering
Central heating
Convection heating
Crop desiccation and weed control
Dishwashing
Drying
Fire training rigs
Food processing and production
Fork lift trucks
Fridges and freezers
Game rearing
Generators
Golf cars
Grain/crop drying
Greenhouse heating
Hot air ballooning
Incineration
Kilns and furnaces
Lawnmowers
Lighting
Powerboat fuel
Metal work
Patio heating
Pig rearing
Plaque heaters
Pool heating
Poultry rearing
Process heating
Radiant heating
Real flame fires
Roof torches
Shrink wrapping
Space heating
Spot heating
Tar boiling
Temporary lighting
Urns
Utility vehicles
Warm air heating
Water heating
White lining

This list is not exhaustive, there are many more applications which LPG is well suited to serve.

3. LPG storage

Overview	3
Storage of LPG product	3
DSEAR	4
User information	6
Cylinder Supplies	7
Cylinder housings	12
Cylinder storage at commercial premises	13
Bulk storage	21
Vessel requirements	31
Bulk storage compounds	33
Residential Park Homes (RPH)	37
Leisure Accommodation Vehicles (LAV)	37
Caravan Holiday Homes	37
Touring Caravans and Motorhomes	37
Cylinder storage aboard leisure vehicles	38
Pressure regulation in leisure vehicles	38
LPG Fuel cells	43
LPG Generators	43

REFERENCE DOCUMENTS

UKLPG COP 1-1:2009 +A1:2012 Bulk LPG storage at fixed installations – Design, installation and operation of vessels located above ground

UKLPG COP 1-2:2012 Bulk LPG storage at fixed installations – Vapour off-take small bulk propane installations

UKLPG COP 22:2011 +A1:2012 Design, installation and testing of LPG piping systems

UKLPG COP 24-1:2006 Use of LPG cylinders at residential and similar premises

UKLPG COP 24-6:2000 Use of propane in cylinders at commercial and industrial premises

UKLPG COP 25:1999 inc. A1:2008 LPG central storage and distribution systems for multiple customers

BS 5482-1:2005 Code of practice for Domestic butane and propane gas burning installations – Part 1: Installations at permanent dwellings, residential park homes and commercial premises, with installation pipework sizes not exceeding DN 25 for steel and DN 28 for corrugated stainless steel or copper

BS 5482-2:1977 Code of practice for Domestic butane and propane gas burning installations – Part 2 Installations in caravans and non-permanent dwellings

DSEAR The Dangerous Substances and Explosive Atmospheres Regulations 2002

Overview

The storage of LPG is two-fold, firstly there is the storage of the actual LPG product (propane and butane) and secondly the storage and use of LPG cylinders and tanks themselves.

Storage of LPG product

LPG is stored in specially constructed vessels and cylinders as a liquid, under moderate pressure.

At a temperature of 15^0 C and atmospheric pressure of 1 bar, the pressure inside a storage vessel or cylinder will be approximately:

- *Propane* *6.9 bar*
- *Butane* *1.8 bar*

Higher or lower air temperatures will alter the liquid temperature within the vessel and therefore vary the pressure inside. In cold weather the pressure is lower and in warmer weather it is higher.

The size of the storage container has no bearing on the pressure within. For instance, compare a 3.9 kg propane cylinder and a 12 tonne bulk storage vessel, although the bulk vessel contains over 3,000 times more gas by volume, both are subject to the same pressure of approximately 6.9 bar.

There may be major variations in the requirements for LPG storage depending on the type of dwelling being worked on.

 © LPG Training & Assessment Ltd 2017

DSEAR

It should be remembered that the requirements of the Dangerous Substances and Explosive Atmospheres Regulations (DSEAR) apply to commercial LPG storage installations and their surroundings. This will include all places of work and anywhere the public have access e.g. marinas, holiday and residential home parks etc.

DSEAR requires that employers (and the self-employed, who are considered employers for the purposes of the Regulations) identify potentially dangerous materials in the workplace and take steps to ensure the safety of people at all times. This would include staff, customers and members of the public.

Dangerous substances and hazardous places can pose a risk to people's safety. The LPG storage facilities found on a park are a prime example of installations that fall within the scope of DSEAR. A dangerous substance can cause a fire or explosion if proper safeguards are not in place. To mitigate any risk, control measures must be defined and implemented to either control or remove the risk completely.

It is imperative that dangerous substances and hazardous (and non-hazardous) places are identified. It is a legal requirement that plans are prepared and procedures put in place to deal with accidents, incidents, and emergencies that may arise. Areas on the park must be classified according to the potential risk. For instance the area around LPG storage vessels would be a higher risk than say a children's playground for the purposes of DSEAR. It would be imperative that all sources of ignition are excluded from around any LPG storage area.

Risk assessments should include the following:

Before any work is carried out, employers must assess the fire and explosion risks that may be caused by dangerous substances. This should include identification and careful examination of:

- *Any dangerous substances in the workplace*
- *Any work activities involving those substances, and the ways in which those substances and work activities could harm people*

Cylinder housings

Where cylinders are installed in a housing or enclosure it is essential it conforms to the following:

- *Any housing must have not less than 30 minutes fire resistance*
- *It should be large enough to accommodate the total number of cylinders and allow easy operation of any valve*
- *It should allow easy access to all connections, regulators and other gas supply components*
- *Permit access for the replacement of cylinders with minimum disturbance*
- *It should be ventilated directly to outside air.*
- *Vents should be fitted at high level (above the cylinder valve) and at low level to prevent gas accumulation in the event of a leak*
- *The area of the upper vents should not be less than 1/100th of the floor area*
- *The area of the lower vents should not be less than 1/100th of the floor area*

N.B. If an ECV is fitted within any housing or enclosure it is essential that it remains readily accessible at all times

Earthing

Whilst a driver is making a delivery of LPG it is important to ensure that no electrostatic potential exists between the tanker delivery connection and the vessel fill connection which could cause a spark when these connections are either made or broken.

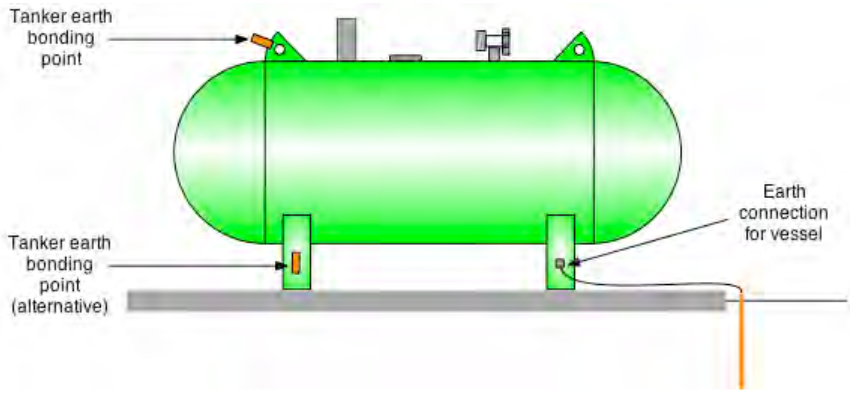

Vessels less than 1.1 tonnes

Vessels may be connected utilising an earth tag fitted to the lifting lug or vessel support legs.

Vessels greater than 1.1 tonnes

Vessels should be permanently bonded to an earthing point (earth rod).

Delivery drivers may then safely connect their vehicles by an earth cable to the vessel by one of the two options above.

Bulk storage compounds

Where an installation is supplying multiple customers such as metered estates, holiday or residential home parks or where members of the public have free access, the security of vessels takes on new meaning.

A compound may be erected to protect the vessels from unauthorised access and possible tampering. Compounds require certain provisions to ensure safe operation. If in doubt the gas supplier must be consulted.

The area around above ground vessels should be enclosed by an industrial type fence, such as an open mesh or palisade types and not be constructed of timber or any other combustible materials.

General requirements for bulk storage compounds:

- *Ensures adequate ventilation*
- *Minimum 1.8 m high*
- *Minimum 1.5 m from the storage installation (or 3.0 m where the public have uncontrolled access)*
- *Have two gates as means of escape*
- *Unobstructed exit*
- *Gates to open outwards*
- *Lockable (but not self locking)*
- *Easy, instant opening from inside the compound*
- *There must be no more than 6 vessels in any one group.*

Water supplies for fire brigade use should be available at all installations, whether single domestic or commercial installations, metered estates, holiday and residential home parks.

Commercial installations may require a different strategy and require the provision of fire extinguishers.

N.B. Always seek expert advice for specific requirements.

4. Gas supply controls

Overview	3
Regulator Standards	4
System design	7
Pressure regulation	8
Single stage pressure reduction	8
Single stage regulators	9
Screw on regulators	9
Clip-on regulators	10
Two stage pressure reduction	13
Three stage pressure reduction	14
1st & 2nd Stage regulators	15
Pressure related safety devices	15
Twin stream regulators	17
Residential Park Homes (RPH)	19
Leisure Accommodation Vehicles (LAV)	19
Caravan Holiday Homes	19
Touring caravans & motorhomes	19
Road vehicles	21

REFERENCE DOCUMENTS

GSIUR The Gas Safety (Installation and Use) Regulations 1998

BS 6891:2015 Specification for the installation and maintenance of low pressure gas installation pipework up to 35 mm (R1¼) in premises

BS 5482-1:2005 Part 1: Installations at permanent dwellings, residential park homes and commercial premises, with installation pipework sizes not exceeding DN 25 for steel and DN 28 for corrugated stainless steel or copper

BS EN 1949:2011+A1:2013 Specification for the installation of LPG systems in leisure accommodation vehicles and accommodation purposes in other vehicles

BS EN 16129:2013 Pressure regulators, automatic change-over devices, having a maximum regulated pressure of 4 bar, with a maximum capacity of 150 kg/h, associated safety devices and adaptors for butane, propane and their mixtures

BS 3016:1989 Pressure regulators and automatic changeover devices for liquified petroleum gases

Overview

LPG used in a supply system will require the pressure to be reduced to the necessary operating pressure, this is achieved by the use of a regulator.

A regulator is designed to control the pressure from an LPG cylinder or vessel, through the installation pipework to appliances. The pressure is maintained at a constant level and within strict tolerances.

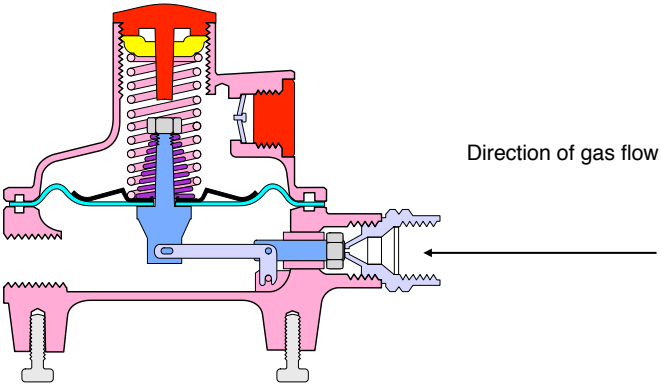

There are many different types of regulator and capacities, care must be taken in selecting the right one for the job in hand. Never rely on replacing like for like, always check what capacity and size is actually needed.

Regulator Standards

BS EN 16129:2013

This standard was published in 2013 and is the reference document for the manufacturing requirements of pressure regulators, automatic change-over devices, having a maximum regulated pressure of 4 bar, with a maximum capacity of 150 kg/h, associated safety devices and adaptors for butane, propane and their mixtures.

When introduced it replaced the following standards:

- *BS EN 12864*
- *BS EN 13785*
- *BS EN 13786*

However be aware that regulators manufactured to these standards will be around for many years to come.

A special note about BS 3016

BS 3016 is a well respected standard which has been used not only in the UK but in many other countries around the world.

Introduced in 1958 and updated through the years. In 2005 it was withdrawn and replaced by three European standards, these were subsequently withdrawn and replaced by BS EN 16129.

Despite the withdrawal of BS 3016 over a decade ago, some manufacturers still choose to manufacture their regulators to BS 3016. Always ensure you are aware of the operating parameters of the regulator you are working on.

Existing installations

Whilst working in the field operatives will come across regulators that may have been constructed according to one of several standards. It is important to check which standard the regulator has been constructed to, before checking its performance.

Table 4.1

BS EN Regulator Standards

Type	Standard	Fuel	Outlet pressure (mbar)			Lock-up*	Operating range (mbar)		
			Nominal	Min	Max	Max	Relief [A]	UPSO	OPSO [A]
Single stage cylinder mounted	BS 3016	Butane	28	23	33	+ 10	-	-	-
		Propane	37	32	42	+ 15	-	-	-
	BS EN 12864 or BS EN 16129	Butane	29	22	35	40	48 – 150	-	48 – 150
		Propane	37	27 [C]	45	50	60 – 150	-	60 – 150
Final stage	BS 3016	Propane	37	32	42	+ 10	50 – 62 [B]	25 – 32	70 – 80
	BS EN 13785 or BS EN 16129		37	32 [C]	45	50	60 – 150	25 – 32 [E]	60 – 150
Automatic changeover device	BS 3016	Propane	37	32	42	+ 15	50 – 62 [B]	-	70 – 80
	BS EN 13786 or BS EN 16129	Butane	29	22	35	40	48 – 150	-	48 – 150
		Propane	27	27 [C]	45	50	60 – 150	-	60 – 150

* Above set pressure.

A For BS EN 13785 and BS EN 16129 regulators this operating range is the maximum and minimum values within which the device needs to activate. BS EN 16129 specifies a tolerance on the manufacturer's declared set pressure of 20% for a relief valve and 15% for an OPSO.

B Normal setting 55 mbar.

C Value is the minimum outlet pressure specified in the regulator standard to align with BS EN 437. However, it is recommended that for the UK market the minimum operating pressure for propane regulators is 32 mbar.

D Due to the UK agreed UPSO range the minimum outlet pressure for regulators manufactured for the UK market is taken as 32 mbar NOT 27 mbar declared in BS EN 13785 and BS EN 16129.

E Industry agreed figures for regulators manufactured for the UK market (not formally documented in standards).

4.6 ◇ GAS SUPPLY CONTROLS

Cylinder supplies

BS 6891:2015 introduced a requirement that all fixed LPG pipework installations have over-pressure shut-off (OPSO) protection fitted. This over-pressure protection ensures that pipework and appliances are not subjected to a pressure greater than they were designed for e.g. a failed regulator.

This requirement applies to installations fed by refillable cylinders in Permanent Dwellings (PD) and Residential Park Homes (RPH).

It does **not** apply to Leisure Accommodation Vehicles (LAV) or Caravan Holiday Homes (CHH) fuelled by LPG.

Bulk supplies

It has been the case for many years that all domestic installations fed by bulk supplies must have UPSO/OPSO protection installed (see page 4.15).

This specification applies equally to all Permanent Dwellings (PD), Residential Park Homes (RPH), Leisure Accommodation Vehicles (LAV) and Caravan Holiday Homes (CHH) supplied by LPG.

N.B. The requirement does not necessarily apply to installations supplying commercial installations.

Some older style butane regulators also feature a screw on connector but it is quite different to the POL connector described previously.

These regulators utilise a neoprene washer to effect a gas tight seal. Always use a spanner to tighten these joints.

Clip-on regulators

Clip-on style regulators are available in both butane and propane versions. This type of fitting is designed to be easier for an inexperienced person to use.

21 mm Clip-on butane regulator

Clip-on cylinder valve

27 mm Clip-on propane regulator

As a result of this ease of use, these regulators are frequently found on cabinet heaters and leisure appliances such as BBQs and patio heaters etc.

5. Gas Pipework

Overview	3
Manufacturing standards	4
Marking of gas pipes	5
Pipework supports	6
Pipe Sleeves	7
Meter boxes	8
Pipework in ducts	10
Jointing pipework	11
Stainless-steel pipework	14
Buried pipework	16
Protection against corrosion	19
Safety precautions	19
Protective equipotential bonding (PEB)	20
Temporary continuity bond	22
Flexible hose and tubing	24
Hose markings	28
Specialist hoses	29
Pipe sizing	30
Residential Park Homes (RPH)	36
Leisure Accommodation Vehicles (LAV)	36

REFERENCE DOCUMENTS

BS 6891:2015 Specification for the installation and maintenance of low pressure gas installation pipework up to 35 mm (R1¼) in premises

BS 5482-1:2005 Part 1: Installations at permanent dwellings, residential park homes and commercial premises, with installation pipework sizes not exceeding DN 25 for steel and DN 28 for corrugated stainless steel or copper

BS EN 1949:2011+A1:2013 Specification for the installation of LPG systems in leisure accommodation vehicles and accommodation purposes in other vehicles

EN 16436-1:2014 +A1:2015 Rubber and plastics hoses, tubing and assemblies for use with propane and butane and their mixture in the vapour phase - Part 1 Hoses and tubing

UKLPG COP 22:2011+A1:2012 Design, Installation and Testing of LPG Piping Systems

UKLPG COP 25:1999+A1:2008 LPG central storage and distribution systems for multiple customers

LPG pipework

Overview

The safe and correct design of an LPG pipework system is a prime consideration before starting installation work. Time spent in the design of a pipework system will pay dividends later and help ensure a safe gas system.

When planning the installation of pipework carrying LPG it is important that all materials are of an appropriate quality, strength and suitable for the proposed purpose. When specifying the materials, remember to consider the location and proposed route of pipework i.e. internal, external, exposed, etc. Compliance with current Regulations, Standards and Codes of Practice is required.

Due to its ease of use most domestic installations will utilise copper tube. Steel, low carbon steel or cast iron fittings protected from corrosion by galvanising are often used for external supply pipework. Stainless steel tube with screwed or compression fittings can be used but is more expensive. Pliable corrugated stainless steel pipework is used in commercial projects.

The requirements for pipework and fittings used in LPG installations are varied and many. Although similar to natural gas requirements there are some important differences to consider e.g. will the pipework be carrying high or low pressure, liquid or vapour LPG.

It is important to correctly identify the type of dwelling being worked on and apply the appropriate standard.

Table 5.1	
LPG Pipework standards	
PD	BS 6891
RPH	
LAV	BS EN 1949

Manufacturing standards

Table 5.2		
BS & EN manufacturing standards applicable for LPG pipework and fittings		
	Tube	Fittings
Copper	BS EN 1057 BS EN 13349	BS EN 1254-1 BS EN 1254-2 BS EN 1254-4 BS EN 1254-5 BS 8537 (press-fit type)
Steel	BS EN 10216-1 BS EN 10217-1 BS EN 10216-2 BS EN 10217-2 BS EN 10255	BS EN 10241
Malleable iron		BS 143 BS 1256 BS EN 10242
Rigid Stainless steel	BS 6362 BS EN 10216-5 BS EN 10217-7 BS EN 10312	BS EN 10241
Corrugated stainless steel	BS 7838 BS EN 15266	
Polyethylene (MDPE)	BS EN 1555-1 BS EN 1555-2	BS 5114 BS EN 1555-3
Valves	BS EN 331 BS 1552 PRS1/E [24] GIS/V7-3	
Flexible hoses, tubing and connections	BS 3212 BS 6501-1 BS EN 16129 BS EN 16436-1 BS EN ISO 10380	
Cooker hoses	BS 669-1 BS EN 14800	
Jointing materials and compounds	BS EN 751	
Soft solder	BS EN 29453	

5.18 ◇ LPG PIPEWORK

The route of buried pipework should be clearly visible if this is not the case then it should be identified by the use of a yellow plastic marker tape located 100 mm to 300 mm above the pipework.

It is recommended that the tape should incorporate a metallic trace wire to facilitate location tracing using suitable equipment.

Anti-shear sleeves

Where metallic and PE pipework are joined the use of an anti-shear sleeve is required. This helps prevent undue stress where the PE pipe exits the metal fitting and is for use with pipes up to 63 mm diameter.

6. Tightness Testing

Overview	3
Measuring pressure	4
Using a manometer	6
Standing pressure	6
Operating pressure	6
Leak Detection Fluid (LDF)	8
IGEM/UP/1B	9
Air test	10
Let-by test	12
Tightness test	14
Installation Volume (IV)	18

Issue 4.3 © LPG Training & Assessment Ltd 2017

REFERENCE DOCUMENTS

IGEM/UP/1B Edition 3+A1:2012 Tightness testing and direct purging of small Liquefied Petroleum Gas/Air, Natural Gas and Liquefied Petroleum Gas installations

Overview

The Gas Safety (Installation & Use) Regulations (GSIUR) require gas systems to be safe. Tightness testing forms part of ensuring the safety of an installation and should be carried out in the following circumstances:

- *New installations or extensions to existing installations*
- *Alterations to (or replacement of) existing installations*
- *Before working on existing installations*
- *Before re-establishing an existing gas supply*
- *If a gas escape is suspected or there is a reported smell of gas*
- *Where there has been a complete loss of supply pressure i.e. upstream of the ECV, or of installation pressure*
- *Routine testing of existing installations*
- *Immediately before purging of installations (except when taking components permanently out of service)*
- *Whenever work is carried out that might affect gas tightness*

The standard used for tightness testing installations (up to 35 mm copper tube) in Permanent Dwellings, Residential Park Homes and Leisure Accommodation Vehicles is IGE/UP/1B. LPG service pipework is covered in UKLPG COP 22.

Table 6.1

Applicable testing standard by installation type

Dwelling type	Condition	IGE/UP/1B	UKLPG COP 22
Permanent Dwellings (PD)	New or existing	✓	
Residential park Home (RPH)	New or existing	✓	
Leisure Accommodation Vehicles (LAV)	New or existing	✓	
LPG service pipework	New or existing		✓

Standards change from time to time, always ensure you are using the current standard for the type of installation being worked on.

Measuring pressure

U gauge, water gauge and manometer are different names for what is fundamentally the same type of instrument.

An accurate gauge for reading gas pressures should be the number one tool in any gas operative's toolbox. It is virtually impossible to carry out any gas work without the use of a gauge at some stage.

The popular U gauge is filled with water (sometimes coloured to aid reading of the gauge in poor light). Electronic gauges are becoming more popular as the price of ownership drops.

Gauges for testing gas pressures literally come in all shapes and sizes.

Type A - One of the oldest and arguably the most reliable type of gauge used for pressure testing is a water gauge or manometer, this utilises a column of water to show gas pressure in the connected gas system or appliance. This type of gauge must be capable of being read to 0.5 mbar.

Type B - Gauges that operate with a high SG (specific gravity) fluid in place of water are capable of reading the same pressures but on a more compact scale. Manufacturers generally state that high SG fluid will require replacement every 6 to 12 months.

6.10 ◇ TIGHTNESS TESTING

Air test

Air Test for new pipework systems before connecting live gas supplies.

Preparation

- *Visual inspection of the entire installation*
- *For best results ensure there are no regulators included in the test*
- *All open ends are sealed with an appropriate fitting*
- *Any appliances are isolated or disconnected from the supply*

Procedure

1. *Connect gauge and test tee to a suitable position*
2. *Attach a hand bellows to the test tee*
3. *Raise pressure in system to 45 – 46 mbar**
4. *Allow 1 minute for pressure and temperature stabilisation***
5. *Allow 2 minutes test period*
6. *Check there is no perceptible movement of the gauge*

* It is assumed for air testing there is no regulator in the section to be tested.

However if a regulator is fitted in the section to be tested, avoid higher pressures to prevent regulator lock-up.

** It may be necessary to extend this time until a stable reading is obtained.

** There may be a slight pressure change during temperature stabilisation, if this happens re-adjust the pressure to the Tightness Test Pressure (TTP) then turn off the pressure source.

Test results

If there is **no perceptible gauge** movement (fall) the installation has passed the test.

Otherwise the installation will have failed and require further investigation.

Following a successful air test Immediately re-test the installation using fuel gas.

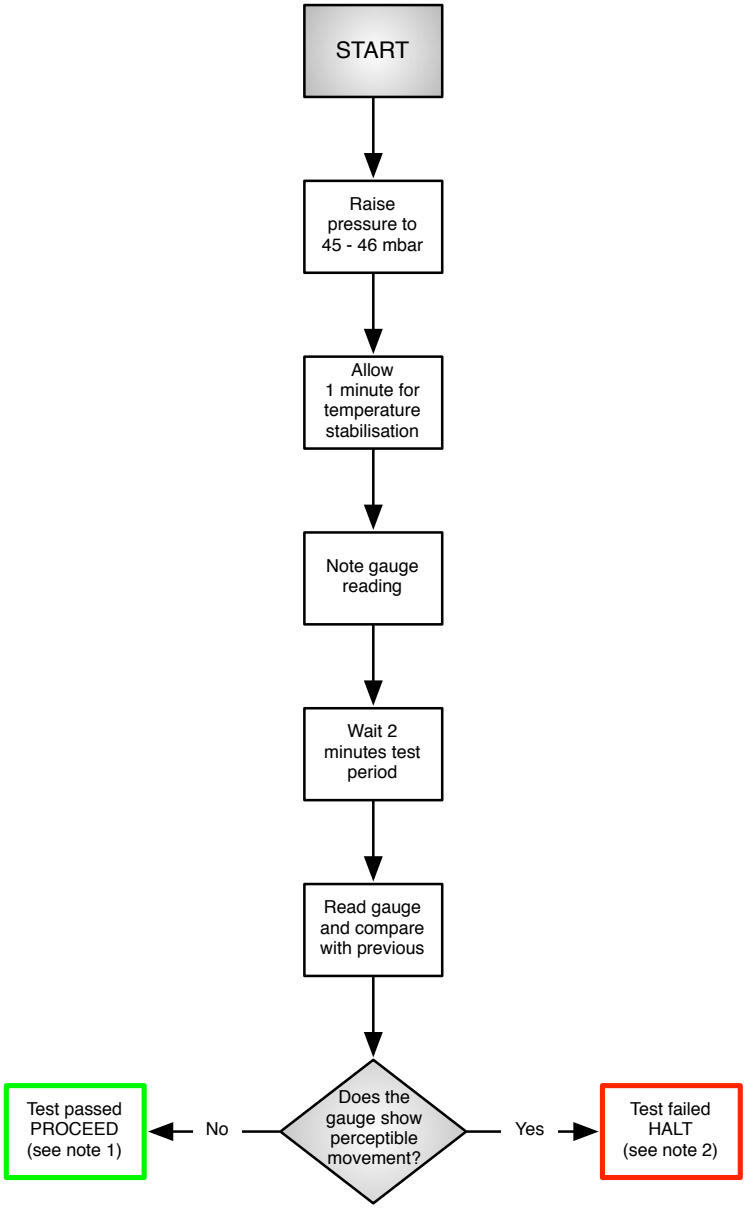

Note 1 System to be purged and then re-tested with fuel gas

Note 2 Trace and repair any escapes then re-test or make the installation safe

7. Purging & Gas Rating

Purging	3
Purge Volume (PV)	4
Installation Volume (IV)	5
Purge procedures	9
Gas input rating	10

REFERENCE DOCUMENTS

GSIUR The Gas Safety (Installation & Use) Regulations

IGEM/UP/1B Edition 3+A1:2012 Tightness testing and direct purging of small Liquefied Petroleum Gas/Air, Natural Gas and Liquefied Petroleum Gas installations

Purging

Overview

Purging a gas supply is the act of removing one type of gas from a system and replacing it with another.

There are two different purge types described below:

Direct purging

Displacement of air by fuel gas (or vice versa).

Indirect purging

Displacement of fuel gas by inert gas followed by displacement by air (or vice versa).

It is important that purging is only be carried out following a successful tightness test.

Reasons to purge

Purging is commonly carried out to ensure that all air is removed from the system and only 100% gas is delivered to appliances. If a gas and air mixture was present in the pipework this could result in incomplete combustion and the production of carbon monoxide. There is also a danger of an appliance being lit, the user turning away and the flame being snuffed out by the passage of air through the burner, then gas reappears and starts filling the room with unlit gas.

When to purge

- *New installations*
- *When an extension to a system has been carried out*
- *Where there has been a complete loss of installation pressure*
- *Where there is a possibility of air being present in the system*

 © LPG Training & Assessment Ltd 2017

8. Ventilation

Overview	3
Permanent dwellings	7
Residential Park Homes	7
Leisure Accommodation Vehicles	14

REFERENCE DOCUMENTS

BS 3632:1995 Residential park homes specification

BS 3632:2005 Residential park homes specification

BS 5482-1:2005 Code of practice for Domestic butane and propane gas burning installations – Part 1: Installations at permanent dwellings, residential park homes and commercial premises, with installation pipework sizes not exceeding DN 25 for steel and DN 28 for corrugated stainless steel or copper

BS 5482-2:1977 Code of practice for Domestic butane and propane gas burning installations – Part 2 Installations in caravans and non-permanent dwellings

BS EN 1949:2011+A1:2013 Specification for the installation of LPG systems for habitation purposes in leisure accommodation vehicles and accommodation purposes in other vehicles

BS EN 721:2004 Leisure accommodation vehicles – Safety ventilation requirements

BS 5440-2:2009 Flueing and ventilation for gas appliances of rated input not exceeding 70 kW net (1st, 2nd and 3rd family gases) – Part 2: Specification for the installation and maintenance of ventilation provision for gas appliances

Overview

All fossil-fuelled appliances require air for combustion, some appliances installed in compartments will require ventilation for cooling purposes, and persons living within a property require air to breathe.

Correct ventilation is very important, there are several reasons for providing ventilation.

- *Provide air for combustion*
- *Allow for the dissipation of heat*
- *Reduce condensation*
- *Provide relief air to counteract the effects of extractor fans*
- *Maintain a comfortable atmosphere for the occupants in a room*

Any ventilation must be of the permanent type this means:

- *Vents must be permanently open to allow air flow through the vent*
- *Closable or hit and miss type ventilators are not allowed*
- *Ventilation should be designed to avoid draughts*
- *Nothing should restrict the free area of ventilation i.e. free air*
- *Permanent openings for ventilation may be protected against vermin with a metal mesh if required*
- *Minimum and maximum opening sizes are required*
- *Any fly screens should be easily removable for cleaning*
- *Ventilators should be sited to prevent blockage*
- *When sizing vents always use the maximum input for all appliances*

9. Flues

Overview	3
Appliance designation	4
Open flues	5
Closed flues	12
Flue testing	14
Room-sealed appliances	19
Natural draught appliances	20
Fan-assisted appliances	21
Flue terminal locations	28
Condensing Boilers	32
Terminal guard	34
Heat shield	34
Flues in voids	35

REFERENCE DOCUMENTS

BS 5440-1:2008 Flueing and ventilation for gas appliances of rated input not exceeding 70 kW net (1st, 2nd and 3rd family gases) Part 1 specification for the installation of gas appliances to chimneys and for maintenance of chimneys

BS 5482-1:2005 Code of practice for Domestic butane and propane gas burning installations – Part 1: Installations at permanent dwellings, residential park homes and commercial premises, with installation pipework sizes not exceeding DN 25 for steel and DN 28 for corrugated stainless steel or copper

BS 5482-2:1977 Code of practice for Domestic butane and propane gas burning installations – Part 2 Installations in caravans and non-permanent dwellings

BS EN 1949:2011+A1:2013 Specification for the installation of LPG systems for habitation purposes in leisure accommodation vehicles and accommodation purposes in other vehicles

Overview

Gas operatives may come across different types of dwelling or property whilst carrying out gas work. It is vital that the type of dwelling being worked on is identified correctly.

This chapter covers the requirements for flues in the following dwelling types:

- *RPH Residential Park Homes*
- *LAV Leisure Accommodation vehicles*

Types of flue

The purpose of a flue is to safely discharge the products of combustion (POC's) to outside air, under all weather conditions. This is achieved in part by the selection of the correct materials, terminal and outlet location.

Any gas appliance that uses a flue has the potential to become a danger. Flues must be regularly inspected to ensure safe operation and check correct installation in accordance with manufacturer's instructions and British Standards.

Flues come in many shapes and forms, it is of vital importance that the operation of the different types is fully understood.

Appliance types found in RPH and LAV installations:

- *Flueless*
- *Open flues*
- *Closed flues*
- *Room-sealed - balanced flues (natural draught)*
- *Room-sealed - balanced flues (fan assisted)*

British Standard BS 5440-1 applies to flue installations in PD, RPH and LAV type dwellings. This British Standard provides detailed guidance on flue design and installation. BS 1949 provides more guidance on flues installed in LAVs. However, the instructions provided by manufacturer's of approved appliances e.g. CE marked, take precedence over British Standards and must always be adhered to when installing or maintaining a flue.

Negative pressure

Modern room-sealed appliances generally utilise a fan to extract the flue gases, the fan draws the flue gases out and this action results in a *negative pressure* being created within the appliance combustion chamber.

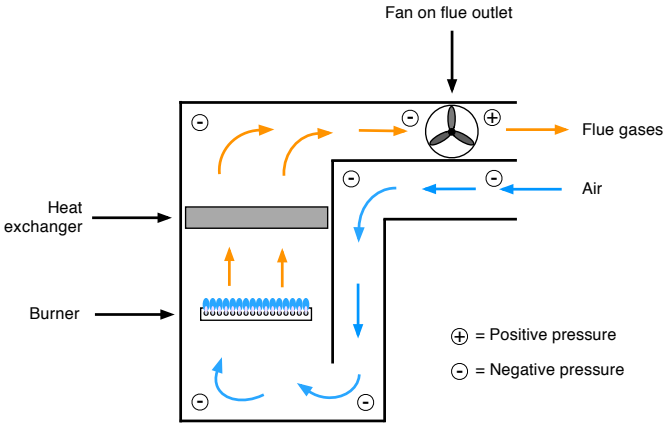

Any case seals that were defective would permit the entry of air from the room into the appliance and out through the flue, this may in turn upset the flame picture and lead to incomplete combustion.

It is therefore vital that all case seals are examined periodically (not more than 12 months) for deterioration, wear and damage.

Positive pressure

Older fan-assisted appliances were constructed with a fan on the air inlet. The reason for this was the technology to build a fan, capable of withstanding the high flue gas temperatures, was not yet available on an economic scale suitable for mass production.

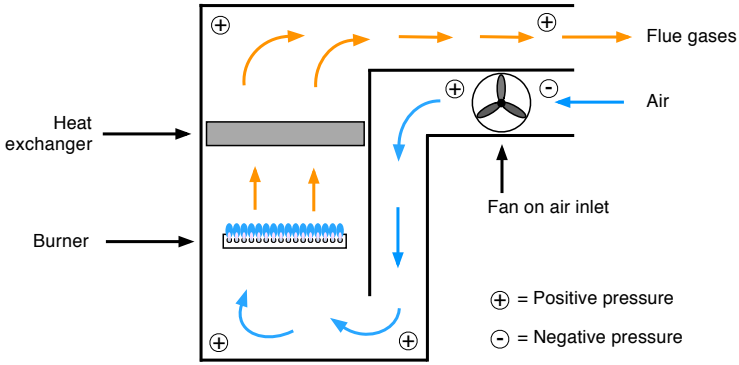

Fitting a fan on the air inlet created a problem, when the appliance was in use and the fan running, air was pushed into the combustion chamber resulting in a *positive pressure* being created within.

Significantly if any leaks were present in the case or its seals, POCs would be pushed into the room where the appliance was installed. This could contaminate the atmosphere putting occupants at risk.

There have been numerous deaths due to *positive pressure* appliances leaking POCs into a dwelling.

Flue terminal locations

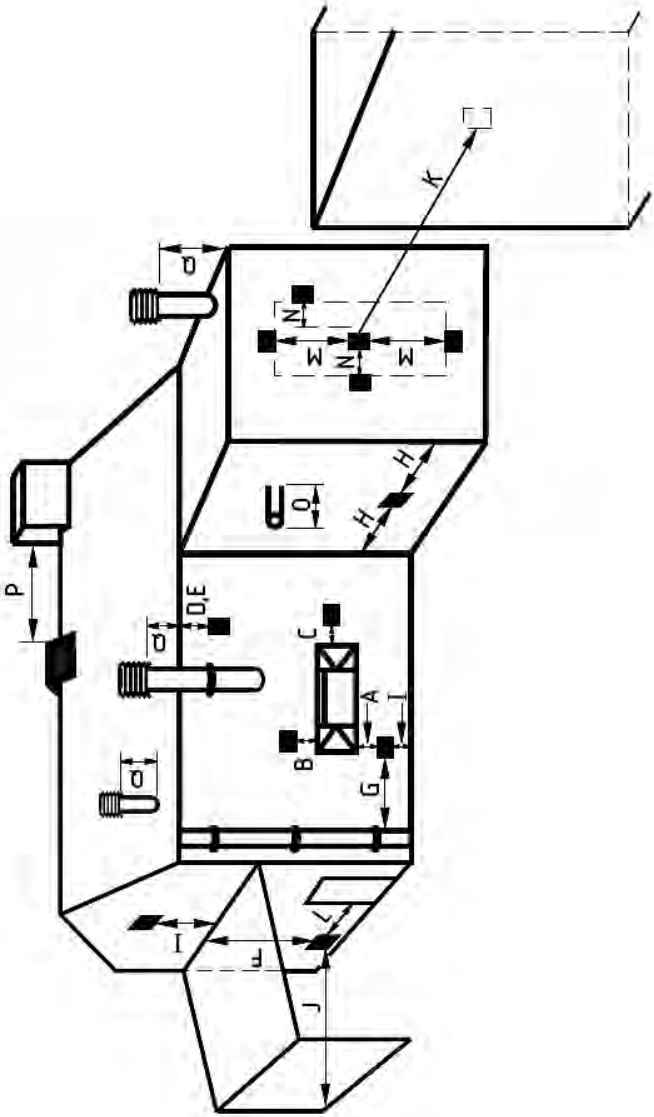

Permitted room-sealed terminal locations

Table 9.4

Room-sealed Terminal Positions

Minimum dimensions for room-sealed flue terminal positions (mm)		Heat Input (kW)	Room Sealed	
			Natural Draught	Fan Assisted
A (A)	Directly below an openable window, opening or ventilators etc.	0 – 7	300	300
		7 – 14	600	
		14 – 32	1500	
		32 – 70	2000	
B (A)	Above an openable window, opening or ventilator etc.	0 – 7	300	
		7 – 14		
		14 – 32		
		32 – 70	600	
C (A)	Horizontally to an openable window, opening or ventilator etc.	0 – 7	300	
		7 – 14	400	
		14 – 32	600	
		32 – 70		
D	Below plastic gutters, soil pipes, drain pipes etc.	0 – 70	300	75
E	Below eaves		300	200
F	Below balconies or car port roof		600	200
G	From a vertical soil pipe or drain pipe		300	150
H (C)	From an internal or external corner		600	300
I	Above ground, roof or balcony		300	300
J	From a surface facing a terminal		600	600
K	From a terminal facing a terminal		600	1200
L	From an opening in car port into the dwelling (e.g. door or window)		1200	
M	Vertically from a terminal on the same wall		1500	
N	Horizontally from a terminal on the same wall		300	
O	From a wall on which the terminal is mounted	0	0	
P	From a vertical structure on the roof		n/a	n/a
Q	Above intersection with roof		n/a	300

n/a = not applicable

Refer to the drawing on page 9.28 whilst using the above table

LPG Training
Our expertise at your fingertips

Handbooks in our LPG SAFETY series

Book 1	Changeover natural gas to LPG
Book 2	Bulk Storage & External Pipework
Book 3	Residential Park Homes & Leisure Accommodation Vehicles
Book 4	Boats & Inland Waterways Craft
Book 5	Touring Caravans & Motorhomes
Book 6	An introduction to LPG (Technical)
Book 7	An Introduction to LPG (Non-technical)

www.lpgtraining.co.uk

ISBN 9780993542107
90000 >
9 780993 542107